VOLUME 1
PERFORMANCE FLIGHT TESTING

CHAPTER 13

EQUATIONS OF MOTION I

DTIC QUALITY INSPECTED 4

19970116 073

NOVEMBER 1993

USAF TEST PILOT SCHOOL
EDWARDS AIR FORCE BASE, CALIFORNIA

DISTRIBUTION STATEMENT A
Approved for public release;
Distribution Unlimited

This textbook, *Equations of Motion I*, was written in July of 1992 to support quasi-steady and dynamic performance flight test techniques taught at the USAF Test Pilot School. It provides basic principles required for both performance and flying qualities post-flight data analysis and was designed to complement the original Equations of Motion course taught during the Flying Qualities Phase.

Author:

GREGORY L. BEEKER
Captain, USAF
Chief Performance Engineer

This textbook has been reviewed and is approved for publication:
12 Nov 1993

RICHARD L. BENNETT
Major, USAF
Chief, Performance Branch

JAMES M. PAYNE
Lieutenant Colonel, USAF
Director of Student Training

TABLE OF CONTENTS

13.1 INTRODUCTION 13.1

13.2 AIRCRAFT DEGREES OF FREEDOM AND THE EQUATIONS OF MOTION 13.1

13.3 AIRCRAFT COORDINATE SYSTEM DEFINITIONS 13.1
- 13.3.1 INERTIAL 13.1
- 13.3.2 FLAT EARTH REFERENCED 13.2
- 13.3.3 INERTIAL NAVIGATION UNIT 13.3
- 13.3.4 BODY-FIXED 13.4
- 13.3.5 STABILITY 13.4
- 13.3.6 WIND 13.5
- 13.3.7 FLIGHT PATH 13.5
- 13.3.8 THRUST 13.6

13.4 COORDINATE SYSTEM TRANSFORMATIONS 13.7
- 13.4.1 BODY-FIXED FROM INERTIAL 13.7
- 13.4.2 BODY-FIXED FROM STABILITY 13.10
- 13.4.3 WIND FROM STABILITY 13.11
- 13.4.4 WIND FROM BODY-FIXED 13.12
- 13.4.5 WIND FROM INERTIAL 13.13
- 13.4.6 FLIGHT PATH FROM INERTIAL 13.14
- 13.4.7 INERTIAL FROM INERTIAL NAVIGATION UNIT 13.15
- 13.4.8 BODY-FIXED FROM THRUST 13.16

13.5 GENERAL VELOCITY RELATIONS 13.17
- 13.5.1 LINEAR VELOCITY 13.17
- 13.5.2 ANGULAR VELOCITY 13.18

13.6 GENERAL FORCE RELATIONS 13.21
- 13.6.1 AIRCRAFT EXTERNAL FORCES 13.21
- 13.6.2 GENERAL FORCE EQUATION OF MOTION 13.22

13.7 REFERENCES 13.25

13.8 BIBLIOGRAPHY 13.26

THIS PAGE INTENTIONALLY LEFT BLANK

13.1 INTRODUCTION

With the advent of dynamic performance testing and the use of advanced instrumentation and data reduction techniques, we can no longer make the basic assumptions, such as wings level flight or zero angle of attack, which allowed the use of simplified performance equations. It is now necessary to have a thorough understanding of the equations governing aircraft dynamics in their general form, and how to relate the information obtained from instrumentation through these equations. The objectives of this course are to introduce the coordinate systems used in aircraft dynamics, to derive the coordinate system transformations necessary for relating forces, accelerations and velocities acting on an aircraft, and using these transformations, derive the general velocity and force relations needed for performance data analysis.

13.2 AIRCRAFT DEGREES OF FREEDOM AND THE EQUATIONS OF MOTION

To develop the equations governing aircraft motion, we must first understand what paths through space the aircraft is free to follow. These paths are defined as the *degrees of freedom*. If we assume the aircraft is rigid, we find that in inertial, three-dimensional space it has six degrees of freedom: it can move forward, sideways, and down, and rotate about any of the three orthogonal axes. From Newton's second law governing translational and rotational motion, we can derive two vector equations of motion: one relating the external forces to the aircraft motion and the other relating the external moments to the aircraft motion. For performance testing, we will only consider the force equation. The moment equation will be developed during the second half of this course taught during the Flying Qualities Phase.

Various coordinate systems have been defined which allow the external forces and moments to be easily related. Thus, a basic understanding of these coordinate systems and of the relationships among them are necessary before we can apply Newton's second law to develop either of the equations of motion.

13.3 AIRCRAFT COORDINATE SYSTEM DEFINITIONS

13.3.1 INERTIAL

An inertial coordinate system is a non-accelerating, non-rotating reference frame in which Newton's second law is valid. Therefore, the equations defining the motion of

an aircraft must be developed in an inertial coordinate system. However, experience with physical observations can be used to determine whether a particular reference system can properly be assumed to be an inertial coordinate system for the application of Newton's laws to a particular problem. For space dynamics in our solar system, the sun axis system is a sufficient approximation for an inertial system. For aircraft flying within the stratosphere, the flat Earth referenced coordinate system is usually a sufficient approximation of an inertial coordinate system.

13.3.2 FLAT EARTH REFERENCED

The flat Earth referenced coordinate system is a "locally" non-rotating reference frame. This frame is made up of unit vectors $\hat{i}_I$, $\hat{j}_I$, and $\hat{k}_I$ which form an orthogonal triad defined by the right-hand rule. The system is defined with the Z_I-axis aligned with the local gravity vector, toward the center of the Earth, leaving the X_I and Y_I axes to form the local horizontal plane (Figure 13.1). The X_I-axis is generally aligned with true North placing the Y_I-axis toward the East. This lends the system to being referred to as the North-East-down coordinate system. The origin of this system can be fixed at a particular point on the Earth's surface, such as a radar site, or fixed to the aircraft's center of gravity. We will be interested in the later case.

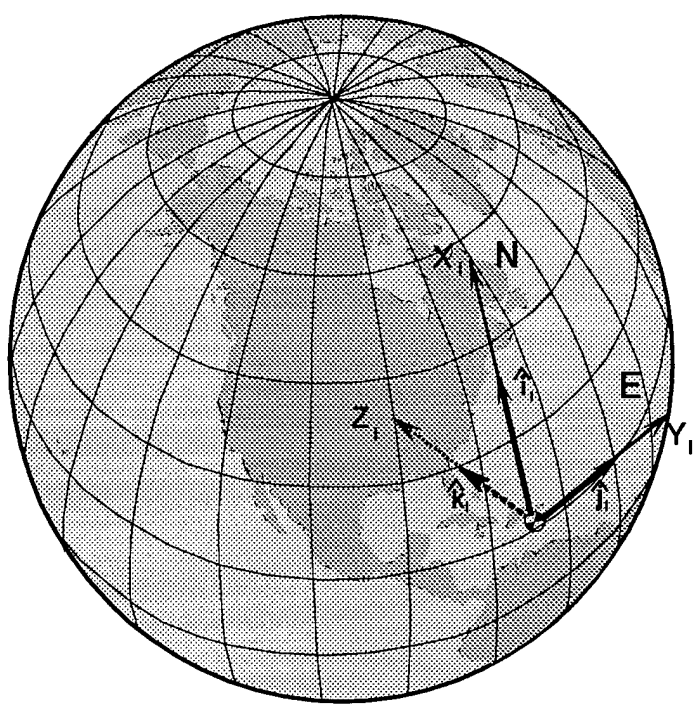

Figure 13.1 Flat Earth Referenced Coordinate System

13.3.3 INERTIAL NAVIGATION UNIT

The inertial navigation unit (INU) of an aircraft is designed to maintain a local inertial reference frame. However, the origin of this reference frame is centered within the INU which is not usually located at the aircraft center of gravity. Therefore, during dynamic maneuvers, the INU orientation, acceleration and velocity data must be corrected for fuselage bending and the offset from the center of gravity in order to determine the actual values in the true inertial reference frame. Additionally, the INU coordinate system may not be aligned with the inertial (flat-Earth) frame defined in section 13.3.2. For example, the TPS C-141A and F-16 INU provide an orthogonal right-handed inertial system with the Z_{INU}-axis directed opposite the gravity vector (up) and the X_{INU}-axis allowed to wander from true North by an angle, α_{INU}, defined as the "wander angle" as shown in Figure 13.2. In contrast, the F-15 aircraft INU provides a left-handed North, East, up reference frame.

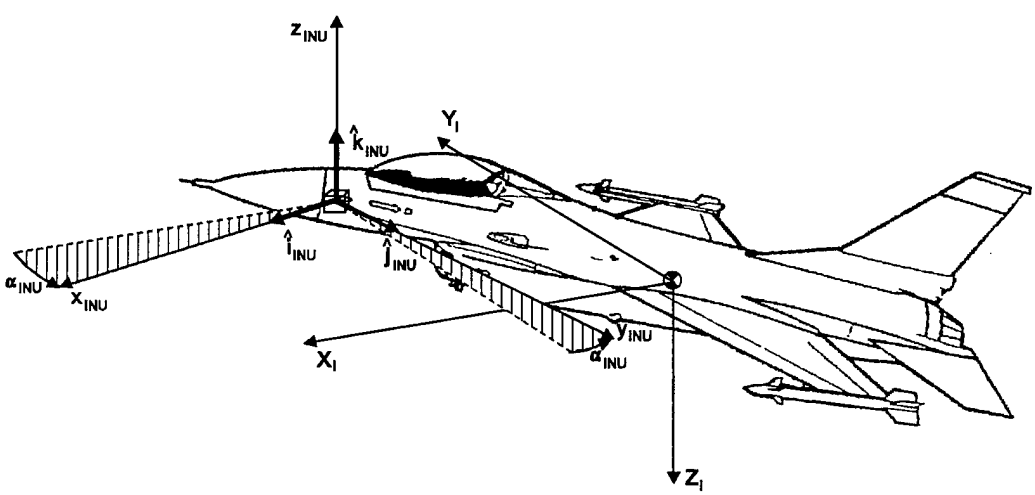

Figure 13.2 F-16 Inertial Navigation Unit Coordinate System

13.3.4 BODY-FIXED

The body-fixed coordinate system is a rotating reference frame with it's origin fixed to the aircraft center of gravity. The axes form an orthogonal triad defined by the right-hand rule with the x-axis always pointing through the aircraft's nose and the y-axis out the right wing (Figure 13.3). This coordinate system has unit vectors $\hat{i}_B$, $\hat{j}_B$, and $\hat{k}_B$.

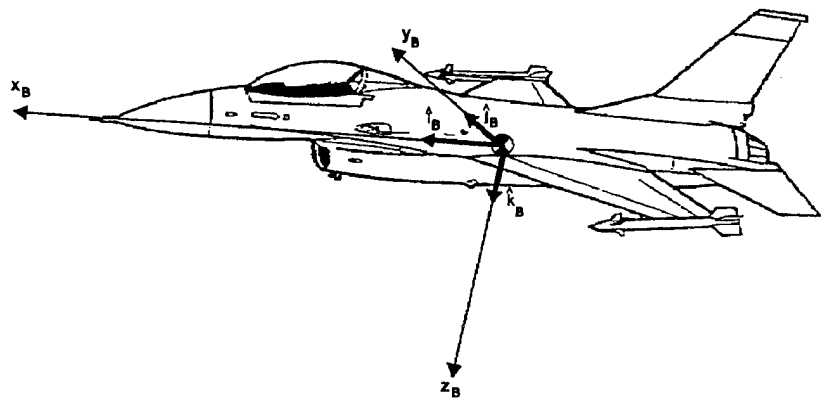

Figure 13.3 Body-Fixed Coordinate System

13.3.5 STABILITY

The stability coordinate system is a rotating reference frame with the origin located at the aircraft center of gravity. This system is made up of the unit vectors $\hat{i}_s$, $\hat{j}_s$, and $\hat{k}_s$, again forming an orthogonal triad defined by the right-hand rule. The x_s and y_s-axes form the plane of motion of the aircraft, with the y_s-axis always aligned with the y_B-axis (Figure 13.4). The body axes are related to the stability axes through a single rotation, defined as the angle of attack, α, about the y_s-axis. Note that under zero sideslip conditions, the x_s-axis is aligned with the flight path vector relative to the surrounding air mass.

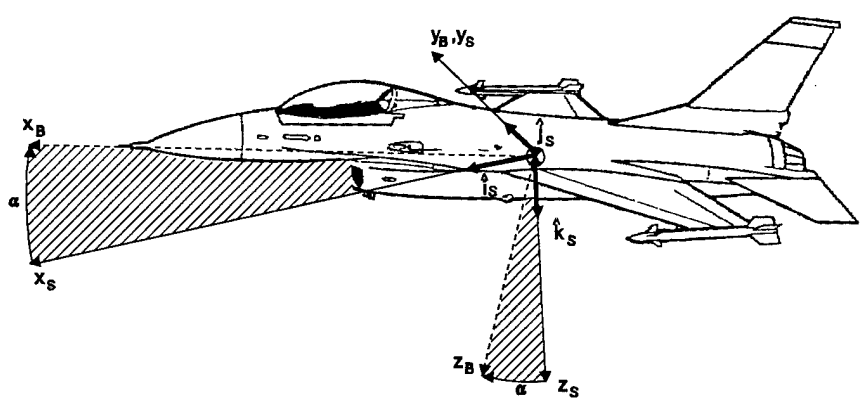

Figure 13.4 Stability Coordinate System

13.3.6 WIND

The wind coordinate system is a rotating reference frame also with it's origin located at the aircraft center of gravity. The unit vectors $\hat{i}_W$, $\hat{j}_W$, and $\hat{k}_W$ form this right-hand orthogonal system. As was true with the stability coordinate system, the x_W and y_W-axes are located in the aircraft instantaneous plane of motion (Figure 13.5). However, the x_W-axis is always aligned with the flight path vector relative to the surrounding air mass. The wind axes are related to the stability axes through a single rotation, defined as the angle of sideslip, β, about the z_s-axis.

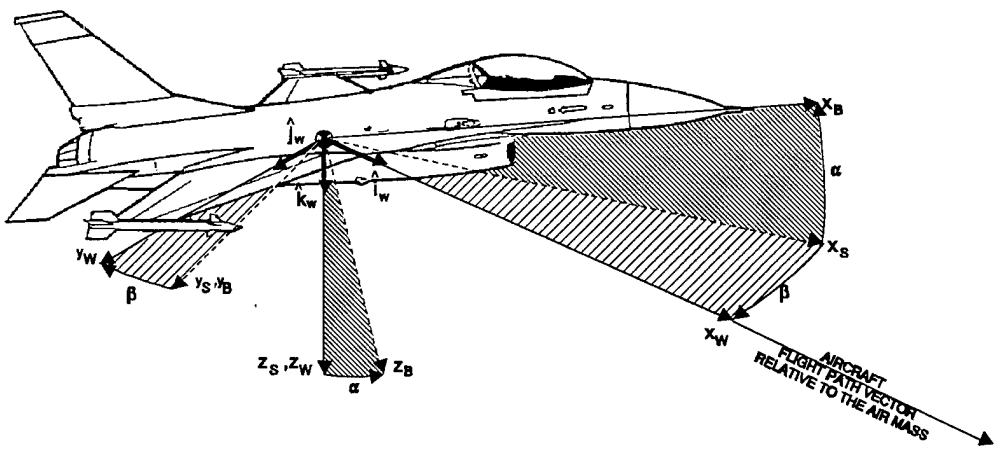

Figure 13.5 Wind Coordinate System

13.3.7 FLIGHT PATH

The flight path coordinate system is a rotating reference frame with the origin located at aircraft center of gravity. The unit vectors $\hat{i}_{FP}$, $\hat{j}_{FP}$, and $\hat{k}_{FP}$ form a right-handed orthogonal system. The x-axis is aligned with the flight path vector relative to the inertial reference frame, with the y-axis perpendicular to the gravity vector and the z-axis located within the vertical plane formed by the flight path and gravity vectors. The coordinate system is defined by two rotations through the horizontal and vertical flight path angles, σ and γ, as shown in Figure 13.6. Note that under zero wind conditions, the flight path vector relative to the inertial frame is aligned with the flight path vector relative to the air mass. Additionally, with zero winds and the aircraft oriented with both the roll angle, Φ, and the angle of sideslip, β, at zero, the flight path coordinate system is perfectly aligned with the wind and stability coordinate systems. Under these conditions, $\gamma = \theta - \alpha$ and $\sigma = \Psi$.

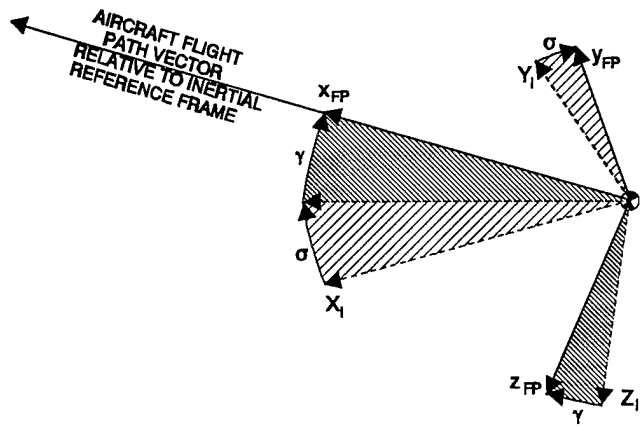

Figure 13.6 Flight Path Coordinate System

13.3.8 THRUST

The gross thrust vector, $\overline{F}_g$, has been previously considered fixed within the body coordinate system, at worst being rotated by an angle i_T about the y_B-axis. However, with the advent of vectored thrust the gross thrust vector can now be rotated in flight to produce added normal and lateral forces and moments. Therefore, to relate thrust to the body-fixed axes now requires defining a new coordinate system centered at the nozzel exit plane, with the x_T-axis aligned with the gross thrust vector. This coordinate system is rotated through two angles: σ_T about the z_B-axis and γ_T about an intermediate y-axis, as shown in Figure 13.7. Note that engine drag, $\overline{F}_e$, is assumed fixed in the stability coordinate system and is located at the inlet plane.

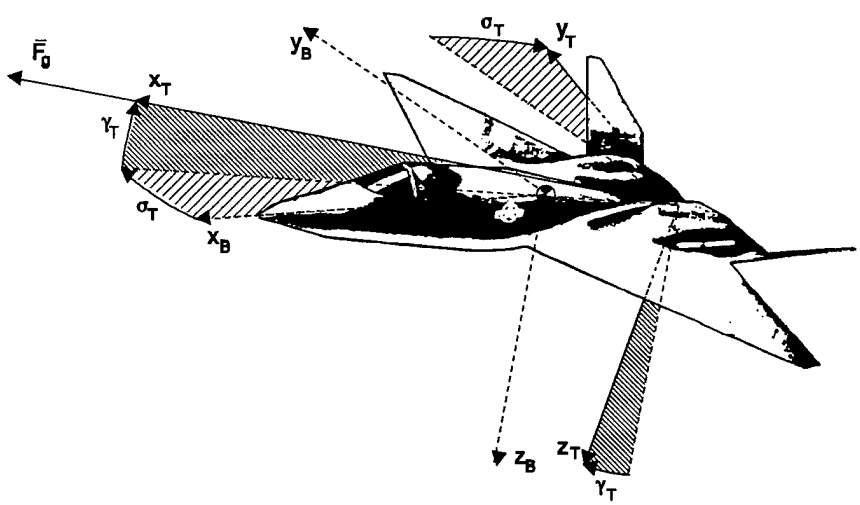

Figure 13.7 Thrust Coordinate System

13.4 COORDINATE SYSTEM TRANSFORMATIONS

With each of the aircraft coordinate systems defined, we can now develop the transformations between each system. This will allow us to later relate force, moment, or velocity vectors defined in different reference frames (Reference 1).

13.4.1 BODY-FIXED FROM INERTIAL

The transformation to the body-fixed reference frame from the inertial (flat Earth) reference frame is accomplished by three rotations through the angles Ψ, θ, Φ, as shown in Figure 13.8. These angles are called the Euler angles. The three rotations are not commutative, that is, they **must** be made in the specified order to achieve the desired aircraft orientation.

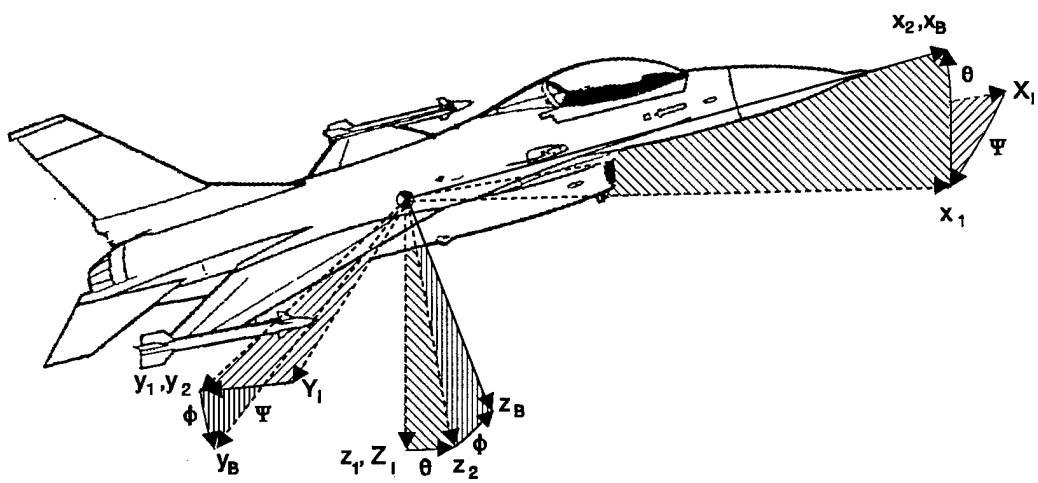

Figure 13.8 Inertial to Body Fixed Coordinate System Transformation through the Euler Angles

The first rotation is about the Z_I-axis through the yaw or heading angle, Ψ, to the first intermediate coordinate system x_1, y_1, z_1, as shown in Figure 13.8a. Thus, to transform a vector $\overline{\chi}$ defined in the inertial reference frame into coordinates of the first intermediate frame:

$$\overline{\chi}_1 = R_3(\Psi)\ \overline{\chi}_I$$

where

$$R_3(\Psi) = \begin{bmatrix} \cos\Psi & \sin\Psi & 0 \\ -\sin\Psi & \cos\Psi & 0 \\ 0 & 0 & 1 \end{bmatrix} \tag{13.1a}$$

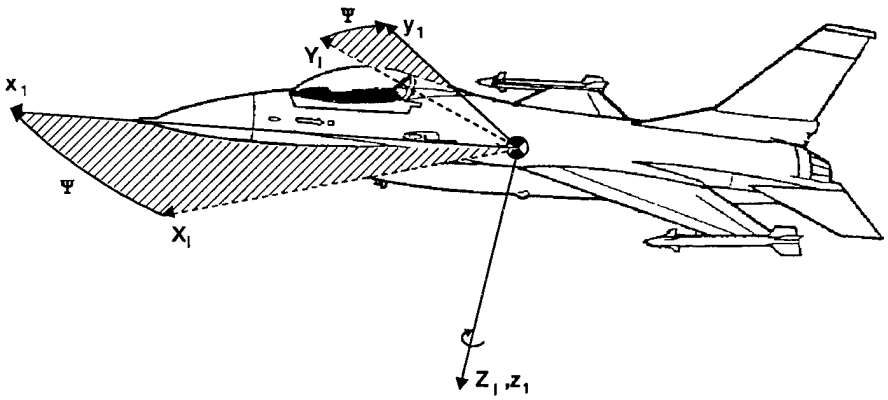

Figure 13.8a Inertial to 1st Intermediate Coordinate System Transformation through the Heading Angle, Ψ

The second rotation is about the y_1-axis through the pitch angle, θ, to the second intermediate coordinate system x_2, y_2, z_2, as shown in Figure 13.8b. Defining $\overline{\chi}_1$ in terms of this system:

$$\overline{\chi}_2 = R_2(\theta)\ \overline{\chi}_1$$

where

$$R_2(\theta) = \begin{bmatrix} \cos\theta & 0 & -\sin\theta \\ 0 & 1 & 0 \\ \sin\theta & 0 & \cos\theta \end{bmatrix} \tag{13.1b}$$

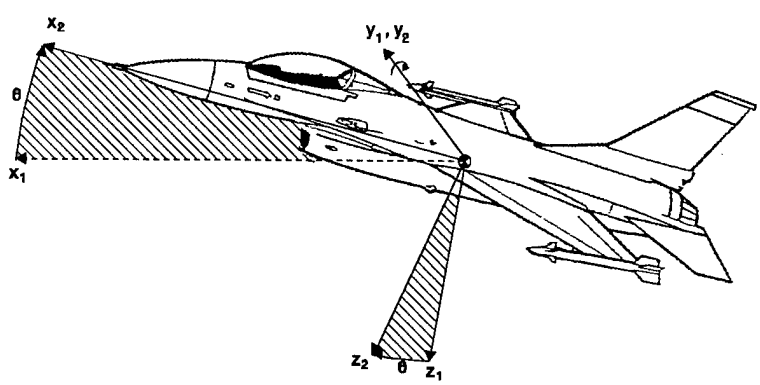

Figure 13.8b 1st to 2nd Intermediate Coordinate System Transformation through the Pitch Angle, θ

The final third rotation is about the x_2-axis through the roll angle, Φ, to the body-fixed coordinate system (Figure 13.8c). Defining χ_2 in terms of the body system:

$$\chi_B = R_1(\Phi)\ \chi_2$$

where

$$R_1(\Phi) = \begin{bmatrix} 1 & 0 & 0 \\ 0 & \cos\Phi & \sin\Phi \\ 0 & -\sin\Phi & \cos\Phi \end{bmatrix} \tag{13.1c}$$

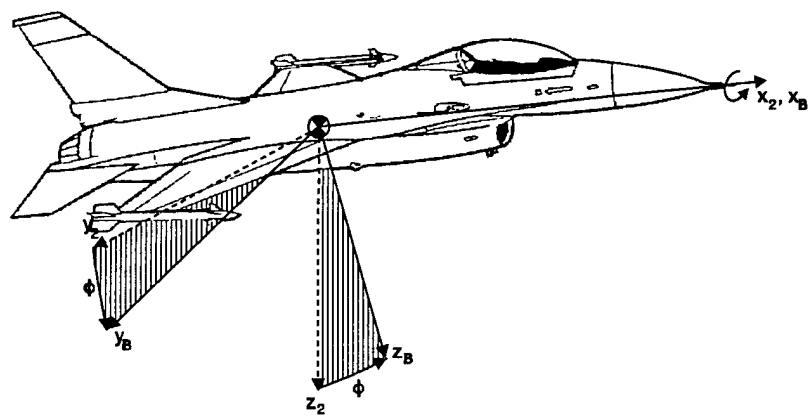

Figure 13.8c 2nd Intermediate to Body-Fixed Coordinate System Transformation through the Roll Angle, Φ

Now, to perform the entire transformation to the body-fixed coordinate system from the inertial, we simply multiply the rotation matrices (equations 13.1c, 13.1b, and 13.1a) to obtain the desired transformation matrix:

$$\begin{aligned} \chi_B &= R_1(\Phi)\ R_2(\theta)\ R_3(\Psi)\ \chi_I \\ &= T^{BI}\ \chi_I \end{aligned}$$

where

$$T^{BI} = \begin{bmatrix} c\theta\, c\Psi & c\theta\, s\Psi & -s\theta \\ s\Phi\, s\theta\, c\Psi - c\Phi\, s\Psi & s\Phi\, s\theta\, s\Psi + c\Phi\, c\Psi & s\Phi\, c\theta \\ c\Phi\, s\theta\, c\Psi + s\Phi\, s\Psi & c\Phi\, s\theta\, s\Psi - s\Phi\, c\Psi & c\Phi\, c\theta \end{bmatrix} \tag{13.2a}$$

Note: c ≡ cos and s ≡ sin

Because they are orthogonal, each of the matrices defined in the above equations have the unique property that the transpose of the matrix is equal to the inverse.

$$[T]^T = [T]^{-1}$$

Thus, if we wish to transform a vector expressed in body-fixed coordinates into the inertial frame:

$$\chi_I = T^{IB}\,\chi_B = [T^{BI}]^T\,\chi_B$$

where

$$T^{IB} = \begin{bmatrix} c\theta\, c\Psi & s\,\Phi\, s\theta\, c\Psi - c\Phi\, s\Psi & c\Phi\, s\theta\, c\Psi + s\Phi\, s\Psi \\ c\theta\, s\Psi & s\Phi\, s\theta\, s\Psi + c\Phi\, c\Psi & c\Phi\, s\theta\, s\Psi - s\Phi\, c\Psi \\ -s\theta & s\Phi\, c\theta & c\Phi\, c\theta \end{bmatrix} \tag{13.2b}$$

13.4.2 BODY-FIXED FROM STABILITY

The transformation to the body-fixed reference frame from the stability includes a single rotation about the y_s-axis through the angle of attack, α, as shown in Figure 13.9. To transform χ expressed in the stability coordinates into body coordinates:

$$\chi_B = T^{BS}\,\chi_S$$

where

$$T^{BS} = R_2(\alpha) = \begin{bmatrix} \cos\alpha & 0 & -\sin\alpha \\ 0 & 1 & 0 \\ \sin\alpha & 0 & \cos\alpha \end{bmatrix} \tag{13.3a}$$

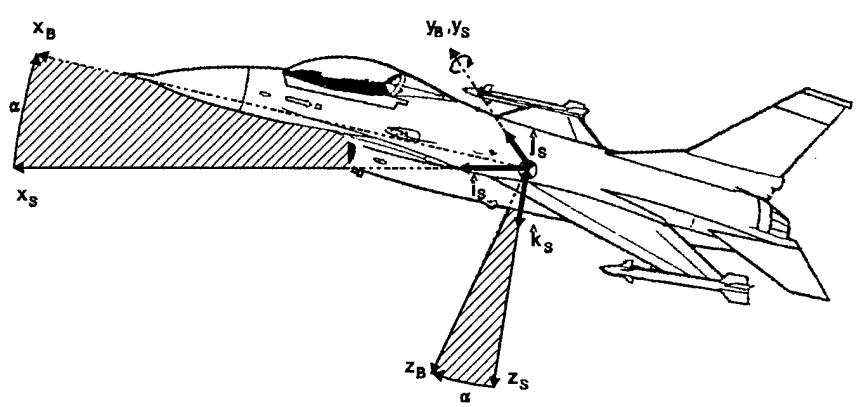

Figure 13.9 Stability to Body-Fixed Coordinate System Transformation through the Angle of Attack, α

To transform χ defined in body-fixed coordinates to stability coordinates:

$$\chi_S = T^{SB}\,\chi_B = [T^{BS}]^T\,\chi_B$$

where

$$T^{SB} = R_2(-\alpha) = \begin{bmatrix} \cos\alpha & 0 & \sin\alpha \\ 0 & 1 & 0 \\ -\sin\alpha & 0 & \cos\alpha \end{bmatrix} \tag{13.3b}$$

13.4.3 WIND FROM STABILITY

The transformation to the wind reference frame from the stability includes a single rotation through the angle of sideslip, β, as shown in Figure 13.10. To transform χ expressed in the stability coordinates into wind coordinates:

$$\chi_W = T^{WS}\,\chi_S$$

where

$$T^{WS} = R_3(\beta) = \begin{bmatrix} \cos\beta & \sin\beta & 0 \\ -\sin\beta & \cos\beta & 0 \\ 0 & 0 & 1 \end{bmatrix} \tag{13.4a}$$

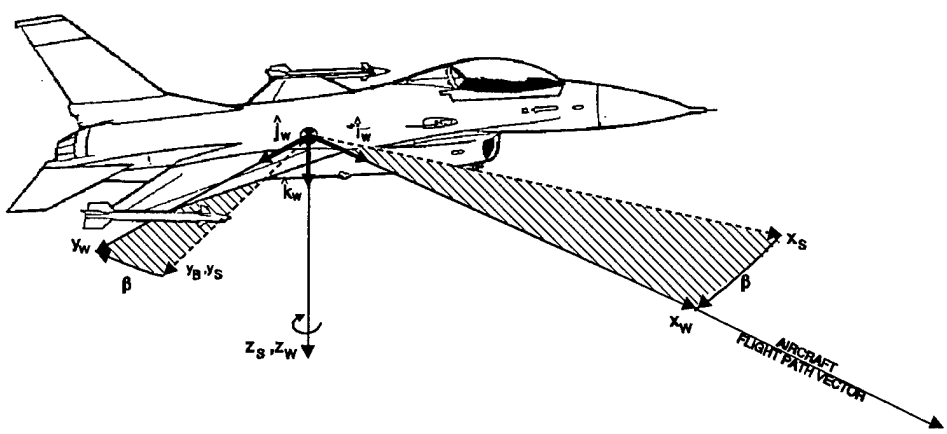

Figure 13.10 Stability to Wind Coordinate System Transformation through the Angle of Sideslip, β

To transform χ defined in wind coordinates to stability coordinates:

$$\chi_S = T^{SW}\,\chi_W = [T^{WS}]^T\,\chi_W$$

and

$$T^{SW} = \begin{bmatrix} \cos\beta & -\sin\beta & 0 \\ \sin\beta & \cos\beta & 0 \\ 0 & 0 & 1 \end{bmatrix} \tag{13.4b}$$

13.4.4 WIND FROM BODY-FIXED

The transformation to wind coordinates from the body-fixed system includes the two rotations through α and β defined in paragraphs 13.4.2 and 13.4.3, as shown previously in Figure 13.5.

To transform χ expressed in body coordinates into wind coordinates:

$$\chi_W = T^{WB}\,\chi_B = T^{WS}\,T^{SB}\,\chi_B = R_3(\beta)\;R_2(-\alpha)\;\chi_B$$

where

$$T^{WB} = \begin{bmatrix} \cos\alpha\cos\beta & \sin\beta & \sin\alpha\cos\beta \\ -\cos\alpha\sin\beta & \cos\beta & -\sin\alpha\sin\beta \\ -\sin\alpha & 0 & \cos\alpha \end{bmatrix} \tag{13.5a}$$

To transform χ back into body coordinates:

$$\chi_B = T^{BW}\,\chi_W = [T^{WB}]^T\,\chi_W$$

where

$$T^{BW} = \begin{bmatrix} \cos\alpha\cos\beta & -\cos\alpha\sin\beta & -\sin\alpha \\ \sin\beta & \cos\beta & 0 \\ \sin\alpha\cos\beta & -\sin\alpha\sin\beta & \cos\alpha \end{bmatrix} \tag{13.5b}$$

13.4.5 WIND FROM INERTIAL

With the development of all transformations between each coordinate system complete, the most general form of the transformation matrices between the inertial coordinate system and the wind coordinate system can now be built. Using equations 13.2a and 13.5a, the transformation to wind from inertial is found to be:

$$T^{WI} = T^{WB}\, T^{BI}$$

$$= \begin{bmatrix} \begin{array}{c} c\theta\, c\Psi\, c\alpha\, c\beta \\ +(s\Phi\, s\theta\, c\Psi - c\Phi\, s\Psi)\, s\beta \\ +(c\Phi\, s\theta\, c\Psi + s\Phi\, s\Psi)\, s\alpha\, c\beta \end{array} & \begin{array}{c} c\theta\, s\Psi\, c\alpha\, c\beta \\ +(s\Phi\, s\theta\, s\Psi + c\Phi\, c\Psi)\, s\beta \\ +(c\Phi\, s\theta\, s\Psi - s\Phi\, c\Psi)\, s\alpha\, c\beta \end{array} & \begin{array}{c} -s\theta\, c\alpha\, c\beta \\ +s\Phi\, c\theta\, s\beta \\ +c\Phi\, c\theta\, s\alpha\, c\beta \end{array} \\ \begin{array}{c} -c\theta\, c\Psi\, c\alpha\, s\beta \\ +(s\Phi\, s\theta\, c\Psi - c\Phi\, s\Psi)\, c\beta \\ -(c\Phi\, s\theta\, c\Psi + s\Phi\, s\Psi)\, s\alpha\, s\beta \end{array} & \begin{array}{c} -c\theta\, s\Psi\, (c\alpha\, s\beta) \\ +(s\Phi\, s\theta\, s\Psi + c\Phi\, c\Psi)\, c\beta \\ -(c\Phi\, s\theta\, s\Psi - s\Phi\, c\Psi)\, s\alpha\, s\beta \end{array} & \begin{array}{c} s\theta\, c\alpha\, s\beta \\ +s\Phi\, c\theta\, c\beta \\ -c\Phi\, c\theta\, s\alpha\, s\beta \end{array} \\ \begin{array}{c} -c\theta\, c\Psi\, s\alpha \\ +(c\Phi\, s\theta\, c\Psi + s\Phi\, s\Psi)\, c\alpha \end{array} & \begin{array}{c} -c\theta\, s\Psi\, s\alpha \\ +(c\Phi\, s\theta\, s\Psi - s\Phi\, c\Psi)\, c\alpha \end{array} & \begin{array}{c} s\theta\, s\alpha \\ +c\Phi\, c\theta\, c\alpha \end{array} \end{bmatrix}$$

(13.6a)

And the transformation to the inertial from the wind system:

$$T^{IW} = [T^{WI}]^T$$

$$= \begin{bmatrix} \begin{array}{c} c\theta\, c\Psi\, c\alpha\, c\beta \\ +(s\Phi\, s\theta\, c\Psi - c\Phi\, s\Psi)\, s\beta \\ +(c\Phi\, s\theta\, c\Psi + s\Phi\, s\Psi)\, s\alpha\, c\beta \end{array} & \begin{array}{c} -c\theta\, c\Psi\, c\alpha\, s\beta \\ +(s\Phi\, s\theta\, c\Psi - c\Phi\, s\Psi)\, c\beta \\ -(c\Phi\, s\theta\, c\Psi + s\Phi\, s\Psi)\, s\alpha\, s\beta \end{array} & \begin{array}{c} -c\theta\, c\Psi\, s\alpha \\ +(c\Phi\, s\theta\, c\Psi + s\Phi\, s\Psi)\, c\alpha \end{array} \\ \begin{array}{c} c\theta\, s\Psi\, c\alpha\, c\beta \\ +(s\Phi\, s\theta\, s\Psi + c\Phi\, c\Psi)\, s\beta \\ +(c\Phi\, s\theta\, s\Psi - s\Phi\, c\Psi)\, s\alpha\, c\beta \end{array} & \begin{array}{c} -c\theta\, s\Psi\, (c\alpha\, s\beta) \\ +(s\Phi\, s\theta\, s\Psi + c\Phi\, c\Psi)\, c\beta \\ -(c\Phi\, s\theta\, s\Psi - s\Phi\, c\Psi)\, s\alpha\, s\beta \end{array} & \begin{array}{c} -c\theta\, s\Psi\, s\alpha \\ +(c\Phi\, s\theta\, s\Psi - s\Phi\, c\Psi)\, c\alpha \end{array} \\ \begin{array}{c} -s\theta\, c\alpha\, c\beta \\ +s\Phi\, c\theta\, s\beta \\ +c\Phi\, c\theta\, s\alpha\, c\beta \end{array} & \begin{array}{c} s\theta\, c\alpha\, s\beta \\ +s\Phi\, c\theta\, c\beta \\ -c\Phi\, c\theta\, s\alpha\, s\beta \end{array} & \begin{array}{c} s\theta\, s\alpha \\ +c\Phi\, c\theta\, c\alpha \end{array} \end{bmatrix}$$

(13.6b)

13.4.6 FLIGHT PATH FROM INERTIAL

The transformation from inertial reference frame to the flight path reference frame involves two rotations; the first about the Z_I-axis through the horizontal flight path angle, σ, and the second about the intermediate y-axis through the vertical flight path angle γ (Figure 13.6). The rotation matrix required to transform a vector χ expressed in inertial coordinates into the intermediate system coordinates can be written as:

$$R_3(\sigma) = \begin{bmatrix} \cos\sigma & \sin\sigma & 0 \\ -\sin\sigma & \cos\sigma & 0 \\ 0 & 0 & 1 \end{bmatrix}$$

And the rotation matrix from the intermediate system to the flight path:

$$R_2(\gamma) = \begin{bmatrix} \cos\gamma & 0 & -\sin\gamma \\ 0 & 1 & 0 \\ \sin\gamma & 0 & \cos\gamma \end{bmatrix}$$

Multiplying the two matrices results in the desired transformation matrix to the flight path coordinate system from the inertial:

$$T^{FP\,I} = R_2(\gamma)\ R_3(\sigma) = \begin{bmatrix} \cos\gamma\cos\sigma & \cos\gamma\sin\sigma & -\sin\gamma \\ -\sin\sigma & \cos\sigma & 0 \\ \sin\gamma\cos\sigma & \sin\gamma\sin\sigma & \cos\gamma \end{bmatrix} \quad (13.7a)$$

Transposing this matrix results in the transformation to the inertial from the flight path system:

$$T^{I\,FP} = \begin{bmatrix} \cos\gamma\cos\sigma & -\sin\sigma & \sin\gamma\cos\sigma \\ \cos\gamma\sin\sigma & \cos\sigma & \sin\gamma\sin\sigma \\ -\sin\gamma & 0 & \cos\gamma \end{bmatrix} \quad (13.7b)$$

13.4.7 INERTIAL FROM INERTIAL NAVIGATION UNIT

13.4.7.1 C-141 or F-16 AIRCRAFT

For the TPS C-141 and F-16 aircraft, the transformation to the inertial reference frame from the navigation reference frame includes two rotations (References 2 and 3); the first about the x_{INU} axis through an angle of 180 degrees to align the z-axes (note that z_{INU} is up), and the second about the z_{INU}-axis through the wander angle, α_{INU}, as shown in Figure 13.11. The rotation matrix required to transform a vector χ expressed in navigation system coordinates into the intermediate system coordinates can be written as:

$$R_1(180°) = \begin{bmatrix} 1 & 0 & 0 \\ 0 & -1 & 0 \\ 0 & 0 & -1 \end{bmatrix}$$

And the rotation matrix from the intermediate system to the inertial:

$$R_3(\alpha_{INU}) = \begin{bmatrix} \cos\alpha_{INU} & \sin\alpha_{INU} & 0 \\ -\sin\alpha_{INU} & \cos\alpha_{INU} & 0 \\ 0 & 0 & 1 \end{bmatrix}$$

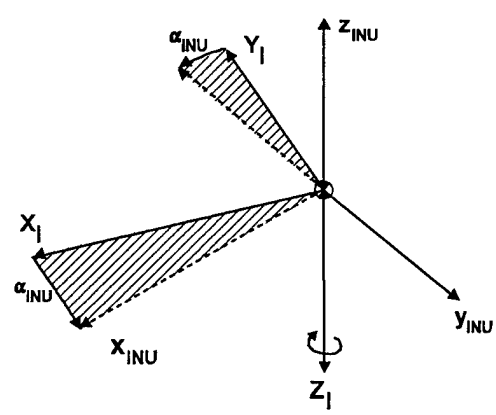

Figure 13.11 C-141/F-16 Inertial Navigation Unit to Inertial Coordinate System Transformation through the Wander Angle, α_{INU}

Multiplying the two matrices results in the desired transformation matrix to the inertial system from the navigation system:

$$T^{I,\,INU} = R_3(\alpha_{INU})\ R_1(180°)$$

$$= \begin{bmatrix} \cos\alpha_{INU} & -\sin\alpha_{INU} & 0 \\ -\sin\alpha_{INU} & -\cos\alpha_{INU} & 0 \\ 0 & 0 & -1 \end{bmatrix} \tag{13.8a}$$

13.4.7.2 F-15 Aircraft

For the F-15 aircraft, the transformation to the inertial reference frame from the navigation frame is:

$$T^{I,\,INU} = \begin{bmatrix} 1 & 0 & 0 \\ 0 & 1 & 0 \\ 0 & 0 & -1 \end{bmatrix} \tag{13.8b}$$

This matrix simply provides the multiplication of the z_{INU} component of the given vector by -1 (Reference 4), converting the navigation left-handed system (North, East, Up) to a right-handed inertial system (North, East, Down).

13.4.8 BODY-FIXED FROM THRUST

The transformation from the body-fixed to the thrust reference frame includes a single rotation about the z_B-axis through the angle σ_T followed by a second rotation about the intermediate y-axis through an angle γ_T, as shown previously in Figure 13.7. This results in a transformation matrix similar to that found for the inertial to flight path transformation:

$$T^{TB} = \begin{bmatrix} \cos\gamma_T\cos\sigma_T & \cos\gamma_T\sin\sigma_T & -\sin\gamma_T \\ -\sin\sigma_T & \cos\sigma_T & 0 \\ \sin\gamma_T\cos\sigma_T & \sin\gamma_T\sin\sigma_T & \cos\gamma_T \end{bmatrix} \tag{13.9a}$$

But what we really need is the inverse transformation to go to body-fixed from thrust coordinates:

$$T^{BT} = \begin{bmatrix} \cos\gamma_T\cos\sigma_T & -\sin\sigma_T & \sin\gamma_T\cos\sigma_T \\ \cos\gamma_T\sin\sigma_T & \cos\sigma_T & \sin\gamma_T\sin\sigma_T \\ -\sin\gamma_T & 0 & \cos\gamma_T \end{bmatrix} \tag{13.9b}$$

With the gross thrust vector aligned with the x_T-axis, this transformation results in:

$$\begin{Bmatrix} F_{g_x} \\ F_{g_y} \\ F_{g_z} \end{Bmatrix}_B = T^{BT} \begin{Bmatrix} F_g \\ 0 \\ 0 \end{Bmatrix} = \begin{Bmatrix} F_g\cos\gamma_T\cos\sigma_T \\ F_g\cos\gamma_T\sin\sigma_T \\ -F_g\sin\gamma_T \end{Bmatrix} \tag{13.10}$$

13.5 GENERAL VELOCITY RELATIONS

13.5.1 LINEAR VELOCITY

The true airspeed of an aircraft, V_t, calculated from the air data system represents the magnitude of the aircraft flight path vector relative to the surrounding air mass. This flight path vector is directed along the wind coordinate system x-axis as shown in Figure 13.5. As long as the air mass is not moving, the true airspeed can be related directly to the ground speed, V_g, through the transformations defined in section 13.4.5. However, if the air mass is moving, the calculation of ground speed must include the velocity of the air mass relative to the ground, V_W. Therefore, the general relationship between the aircraft velocity in the inertial frame and the aircraft velocity relative to wind can be written as:

$$\begin{Bmatrix} V_x \\ V_y \\ V_z \end{Bmatrix}_I = T^{IW} \begin{Bmatrix} V_t \\ 0 \\ 0 \end{Bmatrix}_W + \begin{Bmatrix} V_{W_x} \\ V_{W_y} \\ V_{W_z} \end{Bmatrix}_I$$

$$= \begin{bmatrix} V_t\,[c\theta\, c\Psi\, c\alpha\, c\beta + (s\Phi\, s\theta\, c\Psi - c\Phi\, s\Psi)\, s\beta \\ \quad + (c\Phi\, s\theta\, c\Psi + s\Phi\, s\Psi)\, s\alpha\, c\beta] + V_{W_x} \\ V_t\,[c\theta\, s\Psi\, c\alpha\, c\beta + (s\Phi\, s\theta\, s\Psi + c\Phi\, c\Psi)\, s\beta \\ \quad + (c\Phi\, s\theta\, s\Psi - s\Phi\, c\Psi)\, s\alpha\, c\beta] + V_{W_y} \\ V_t\,[-s\theta\, c\alpha\, c\beta + s\Phi\, c\theta\, s\beta + c\Phi\, c\theta\, s\alpha\, c\beta] + V_{W_z} \end{bmatrix} \tag{13.11}$$

If an aircraft is equipped with an INU, the inertial velocity can be measured directly, allowing the wind velocity components to be calculated from the above equations. Notice that the ground speed is simply the velocity in the inertial horizontal plane, and is given by:

$$V_g = \sqrt{V_{x_I}^{\,2} + V_{y_I}^{\,2}} \tag{13.12}$$

Additionally, the aircraft actual climb rate, $\dot{h}$, is simply the negative of the vertical component of velocity

$$\dot{h} = -V_z \tag{13.13}$$

Therefore, from equation 13.11,

$$\dot{h} = V_t[\,(s\theta\, c\alpha - c\Phi\, c\theta\, s\alpha)\, c\beta - s\Phi\, c\theta\, s\beta] - V_{W_z} \tag{13.14a}$$

Measurements of climb rate from an aircraft air data system, $\dot{H}_c$, must be corrected since they differ from actual (geometric) climb rates due to deviations in ambient temperature from standard day values. Thus, equation 13.14a can be rewritten as:

$$\begin{aligned}\dot{h} = \dot{H}_c \frac{T_a}{T_{a_{SD}}} &= V_t[(s\theta\, c\alpha - c\Phi\, c\theta\, s\alpha)\, c\beta - s\Phi\, c\theta\, s\beta] - V_{W_z} \\ &= V_t \sin\gamma_{AirMass} - V_{W_z} \qquad \left(= V_g \sin\gamma_{Inertial}\right)\end{aligned} \tag{13.14b}$$

where T_a is the actual ambient temperature at the test altitude, $T_{a_{SD}}$ is the standard day ambient temperature corresponding to the test altitude, $\gamma_{AirMass}$ is the aircraft flight path vector relative to the air mass, and $\gamma_{Inertial}$ is the aircraft flight path vector relative to the inertial (flat Earth) frame.

13.5.2 ANGULAR VELOCITY

Based on the angular relationships among the aircraft coordinate systems defined previously, we can now define the angular velocity vector between any two systems. First consider the angular velocity between the inertial and body-fixed coordinate system. Three rotations occur through the Euler angles, and the angular rates associated with each rotation can be added vectorially. Thus, the angular velocity of the body-fixed axes with respect to the inertial axes is:

$$\varpi^{IB} = \dot{\Psi}\,\hat{k}_I + \dot{\theta}\,\hat{j}_2 + \dot{\Phi}\,\hat{i}_B \tag{13.15a}$$

Expressing this vector in terms of body-fixed coordinates:

$$\{\omega\}_B^{IB} = \mathrm{T}^{BI}\begin{Bmatrix}0\\0\\\dot{\Psi}\end{Bmatrix}_I + R_1(\Phi)\begin{Bmatrix}0\\\dot{\theta}\\0\end{Bmatrix}_2 + \begin{Bmatrix}\dot{\Phi}\\0\\0\end{Bmatrix}_B$$

or

$$\{\omega\}_B^{IB} = \begin{Bmatrix}-\dot{\Psi}\sin\theta\\\dot{\Psi}\sin\Phi\cos\theta\\\dot{\Psi}\cos\Phi\cos\theta\end{Bmatrix}_B + \begin{Bmatrix}0\\\dot{\theta}\cos\Phi\\-\dot{\theta}\sin\Phi\end{Bmatrix}_B + \begin{Bmatrix}\dot{\Phi}\\0\\0\end{Bmatrix}_B \tag{13.15b}$$

But the components of this angular velocity vector expressed in terms of the body-fixed coordinates are defined as the inertial angular rates P, Q, and R, where:

$$\omega_{x_B}{}^{IB} \equiv \text{Inertial roll rate, P}$$
$$\omega_{y_B}{}^{IB} \equiv \text{Inertial pitch rate, Q}$$
$$\omega_{z_B}{}^{IB} \equiv \text{Inertial yaw rate, R}$$

Thus, the inertial body system angular rates are given by:

$$P = \dot{\Phi} - \dot{\Psi}\sin\theta \tag{13.16a}$$

$$Q = \dot{\Psi}\sin\Phi\cos\theta + \dot{\theta}\cos\Phi \tag{13.16b}$$

$$R = \dot{\Psi}\cos\Phi\cos\theta - \dot{\theta}\sin\Phi \tag{13.16c}$$

Note that if we wish to instead relate the angular velocity of the inertial frame with respect to the body, we need only multiply the previous results by (-1), since

$$\varpi^{BI} = -\varpi^{IB} \tag{13.17}$$

Now consider the angular rates between the body-fixed and wind coordinate systems. The equation for the angular velocity of the wind axes with respect to the body-fixed axes can be expressed as

$$\varpi^{BW} = -\dot{\alpha}\hat{j}_B + \dot{\beta}\hat{k}_s \tag{13.18a}$$

Notice the negative sign of α is due to the definition of α; a positive rotation from the stability to the body axes. Our transformation took us the opposite way. Now, expressing equation 13.18a in terms of body coordinates:

$$\{\omega\}_B^{BW} = \begin{Bmatrix} 0 \\ -\dot{\alpha} \\ 0 \end{Bmatrix}_B + T^{BS}\begin{Bmatrix} 0 \\ 0 \\ \dot{\beta} \end{Bmatrix}_S$$

or

$$\{\omega\}_B^{BW} = \begin{Bmatrix} -\dot{\beta}\sin\alpha \\ -\dot{\alpha} \\ \dot{\beta}\cos\alpha \end{Bmatrix}_B \tag{13.18b}$$

Again, the angular velocity of the body-fixed system with respect to the wind system is simply the negative of the above results

$$\overline{\omega}^{WB} = -\overline{\omega}^{BW} \tag{13.19}$$

Note that we can develop any angular velocity vector between two reference frames and express it in terms of a desired coordinate system based on similar analysis.

Recall that to apply Newton's 2nd law, time derivatives can only be taken in an "inertial" reference frame. The primary significance of the angular velocity vector is that it allows the calculation of an inertial time derivative of a vector expressed in a rotating frame *to be performed in the rotating frame*, as illustrated in the following relation:

$$\frac{{}^{NR}d\,\overline{A}_R}{dt} = \frac{{}^{R}d\,\overline{A}_R}{dt} + \overline{\omega}_R^{NR,R} \times \overline{A}_R \tag{13.20}$$

where $\overline{A}_R$ is an arbitrary vector expressed in the rotating frame. For example, consider the true velocity vector, which is defined in the wind reference frame. The time rate of change of this vector in the inertial reference frame can be expressed as:

$$\frac{{}^{I}d\,\overline{V}_{t_W}}{dt} = \frac{{}^{W}d\,\overline{V}_{t_W}}{dt} + \overline{\omega}_W^{IW} \times \overline{V}_{t_W}$$

where

$$\overline{\omega}_W^{IW} = \mathbf{T}^{WB}\left\{\overline{\omega}_B^{IB} + \overline{\omega}_B^{BW}\right\}$$

13.6 GENERAL FORCE RELATIONS

13.6.1 AIRCRAFT EXTERNAL FORCES

The external forces acting on an aircraft include the gravitational force, aerodynamic forces, and propulsion system forces. Each of these forces is defined in one of the coordinate systems presented in section 13.3, as shown in Figure 13.12.

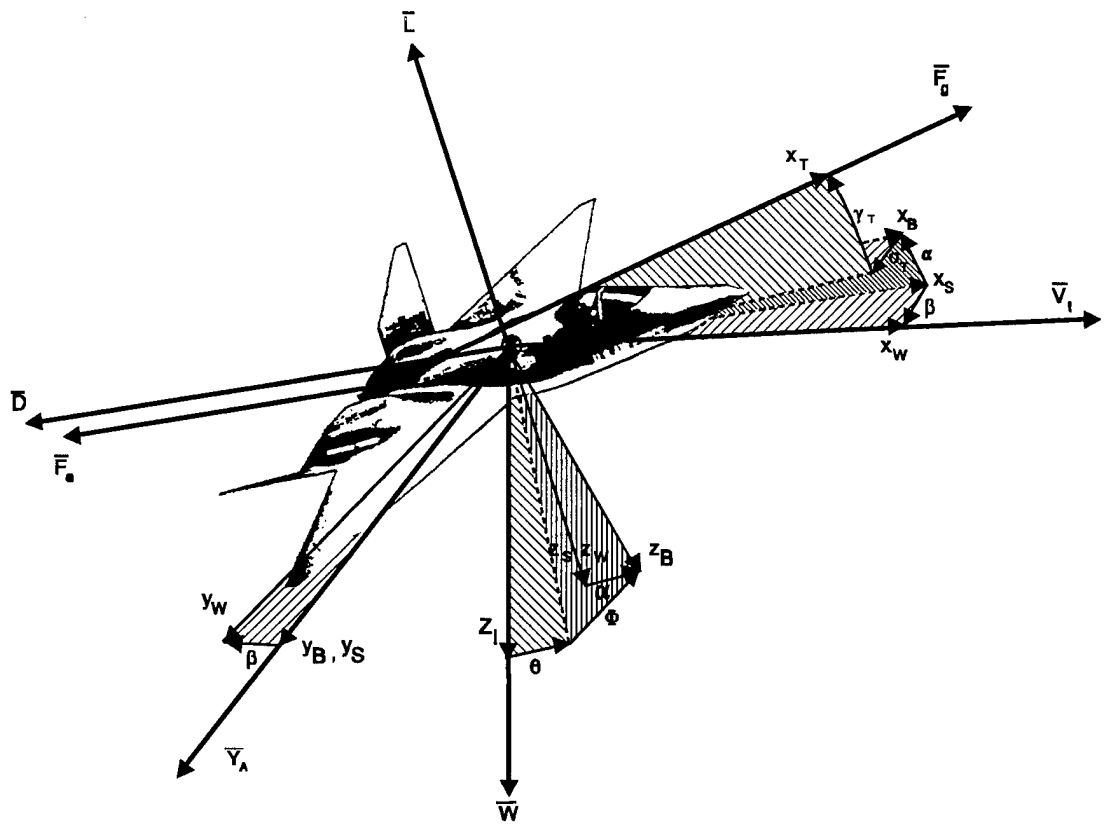

Figure 13.12 Aircraft External Force Definition

The gravitational force vector is along the Z_I-axis, and is given by:

$$\overline{F}_{grav} = \overline{W} = m\overline{g} = mg\hat{k}_I \tag{13.21}$$

where

m ≡ aircraft instantaneous mass

g ≡ gravitational acceleration,

assumed constant (= 32.2 ft/s^2 or 9.81 m/s^2)

The aerodynamic force vector is defined in the stability coordinate system as follows:

$$\overline{F}_{aero} = \overline{D} + \overline{Y}_A + \overline{L} = -D\,\hat{i}_s + Y_a\,\hat{j}_s - L\,\hat{k}_s \tag{13.22}$$

where

D ≡ Aerodynamic Drag
Y_A ≡ Aerodynamic Side Force
L ≡ Aerodynamic Lift

The propulsion system forces include the gross thrust and engine drag. The gross thrust, $\overline{F}_g$, is defined in the thrust coordinate system while the engine drag, $\overline{F}_e$, is defined in the stability system. Thus, the propulsion system force vector can be written as

$$\overline{F}_{prop} = F_g\,\hat{i}_T - F_e\,\hat{i}_S \tag{13.23}$$

13.6.2 GENERAL FORCE EQUATION OF MOTION

From Newton's 2nd Law, the sum of the external forces is equal to the time rate of change in momentum:

$$\Sigma\overline{F}_{ext} = \frac{{}^I d}{dt}\,\overline{p} = \frac{{}^I d}{dt}\,(m\overline{V}) \tag{13.24a}$$

Even though the vehicle mass is constantly changing, we can consider it as a constant in the equation for an instant in time. This results in

$$\Sigma\overline{F}_{ext} = m\left(\frac{{}^I d}{dt}\,\overline{V}\right) = m\,{}^I\overline{a} \tag{13.24b}$$

Inserting all external forces acting on the aircraft yields

$$m\,{}^I\overline{a} = \begin{Bmatrix} 0 \\ 0 \\ mg \end{Bmatrix}_I + \begin{Bmatrix} -D - F_e \\ Y_A \\ -L \end{Bmatrix}_S + \begin{Bmatrix} F_g \\ 0 \\ 0 \end{Bmatrix}_T \tag{13.25}$$

Expressing this equation in terms of the *stability* coordinate system, assuming the inertial accelerations are originally expressed in the inertial frame (possibly measured from an INU) and *do not* include gravitational acceleration, produces:

$$m\,\mathbf{T}^{SI}\{{}^{I}a\}_{I} = \mathbf{T}^{SI}\begin{Bmatrix}0\\0\\mg\end{Bmatrix}_{I} + \begin{Bmatrix}-D-F_e\\Y_A\\-L\end{Bmatrix}_{S} + \mathbf{T}^{ST}\begin{Bmatrix}F_g\\0\\0\end{Bmatrix}_{T}$$

$$= \begin{Bmatrix}-mg\,(s\theta\,c\alpha - c\Phi\,c\theta\,s\alpha) - D - F_e - F_g\,(s\gamma_T\,s\alpha - c\gamma_T\,c\sigma_T\,c\alpha)\\ mg\,s\Phi\,c\theta + Y_A + F_g\,c\gamma_T\,s\sigma_T\\ mg\,(s\theta\,s\alpha + c\Phi\,c\theta\,c\alpha) - L - F_g\,(s\gamma_T\,c\alpha + c\gamma_T\,c\sigma_T\,s\alpha)\end{Bmatrix}_{S}$$

(13.26a)

Equation 13.26a represents the most general form of the force equation expressed in stability coordinates. If we assume that the thrust vector is fixed at an angle i_T with the x-body in the x-z body plane, then this equation simplifies to

$$m\,\mathbf{T}^{SI}\{{}^{I}a\}_{I} = \begin{Bmatrix}-mg\,(s\theta\,c\alpha - c\Phi\,c\theta\,s\alpha) - D - F_e + F_g\,c\,(\alpha + i_T)\\ mg\,s\Phi\,c\theta + Y_A\\ mg\,(s\theta\,s\alpha + c\Phi\,c\theta\,c\alpha) - L - F_g\,s\,(\alpha + i_T)\end{Bmatrix}_{S}$$

(13.26b)

If we consider the following additional assumptions for an aircraft in steady, wings level flight:

1. Zero Roll ($\Phi = 0$)
2. Thrust vector fixed along x-body axis ($\gamma_T = \sigma_T = 0$)
3. Zero winds
4. Zero inertial accelerations ($a_x = a_y = a_z = 0$)

equation 13-26b reduces to

$$\overline{0} = \begin{Bmatrix}-mg\,\sin(\theta - \alpha) - (F_e + D) + F_g\,\cos\alpha\\ Y_A\\ mg\,\cos(\theta - \alpha) - L - F_g\,\sin\alpha\end{Bmatrix}_{S}$$

and the classical equations emerge:

$$F_g \cos\alpha - F_e - mg \sin\gamma = F_n - W \sin\gamma = D \tag{13.27a}$$

$$Y_A = 0 \tag{13.27b}$$

$$mg \cos\gamma = W \cos\gamma = L + F_g \sin\alpha \tag{13.27c}$$

where

F_n ≡ net thrust
W ≡ aircraft weight

The accelerations imposed on an aircraft can also be measured with body accelerometers. However, these measured accelerations include the gravitational acceleration acting on the aircraft. Therefore, equation 13.25, expressed in the stability reference frame, must be rewritten as:

$$m\, T^{SB}\left\{{}^{I}a_{accel}\right\}_B = \begin{Bmatrix} -D - F_e \\ Y_A \\ -L \end{Bmatrix}_S + T^{ST} \begin{Bmatrix} F_g \\ 0 \\ 0 \end{Bmatrix}_T$$

$$= \begin{Bmatrix} -D - F_e - F_g\,(s\gamma_T\, s\alpha - c\gamma_T\, c\sigma_T\, c\alpha) \\ Y_A + F_g\, c\gamma_T\, s\sigma_T \\ -L - F_g\,(s\gamma_T\, c\alpha + c\gamma_T\, c\sigma_T\, s\alpha) \end{Bmatrix}_S \tag{13.28a}$$

Again, if we assume that the thrust vector is fixed at an angle i_T with the x-body in the x-z body plane, then equation 13.28a simplifies to

$$m\, T^{SB}\left\{{}^{I}a_{accel}\right\}_B = \begin{Bmatrix} -D - F_e + F_g\, c(\alpha + i_T) \\ Y_A \\ -L - F_g\, s(\alpha + i_T) \end{Bmatrix}_S \tag{13.28b}$$

Equations 13.26 and 13.27 are valid for application to any stable, quasi-steady, or dynamic performance test method. In the second half of this course, we will use the same principles presented to complete the development of the aircraft moment equations of motion for application to flying qualities testing.

13.7 REFERENCES

1. Roskam, Jan, Airplane Flight Dynamics and Automatic Flight Controls, Part 1, Roskam Aviation and Engineering Corporation, 1979 (pages 25-31, 113).

2. Specification for USAF Standard Form, Fit, and Function (F^3) Medium Accuracy Inertial Navigation Unit, SNU 84-1, Administration 1, Change Notice 1, Revision 3, Aeronautical Systems Division, Air Force Systems Command, 5 May 87.

3. Signal Interface Control Document for the F-16 Avionic System (Block 15B), General Dynamics, Fort Worth Division, 31 Oct 81.

4. Specification for the USAF F-15 Inertial Navigation Set, FNU 85-1, Revision B, Change Notice 2, Mar 91.

13.8 BIBLIOGRAPHY

1. Olson, Wayne M, Use of Inertial Navigation System, Flight Dynamics Branch Office Memo, July 1990.

2. Unaugmented Airplane Motion, Flying Qualities Phase Part II, USAF Test Pilot School (Unpublished).